ROECO

Bearing Data

Ball Bearing Units

Bearing No. : UKFS311+H2311

Dimensions

L = 185

J = 140

N = 23

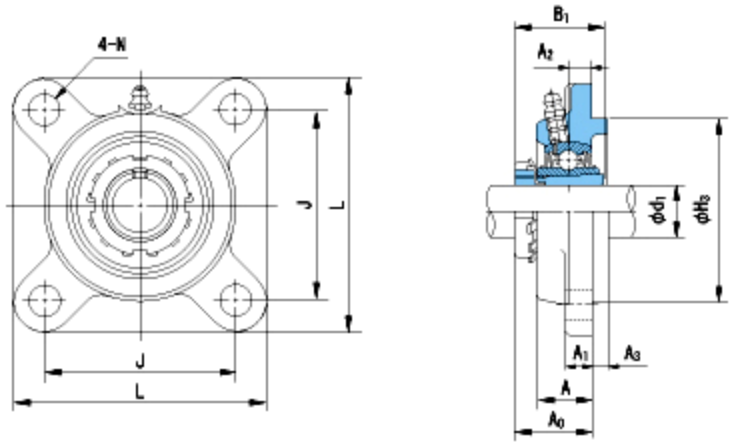

Dimensions

d1 = 50

A1 = 20

A2 = 17

B1 = 59

H3 = 150

A = 39

A0 = 50.5

Mass = 6.2 kg

Basic Dynamic Load Rating Cr : **71500** N

Basic Static Load Rating Cor : **44800** N

Limiting Speed ;

Grease Lubrication : **-** rpm

Oil Lubrication : **-** rpm

	INNER RING	OUTER RING
O.D.Surface Runout with Side :		-
Axial Runout with Bore :	-	
Axial Runout with Raceway :	-	-
Width Variation :	-	-
Radial Runout :	-	-