ROECO

Bearing Data

Ball Bearing Units

Bearing No. : UFL005

Dimensions

H = 95

L = 60

J = 75

N = 10

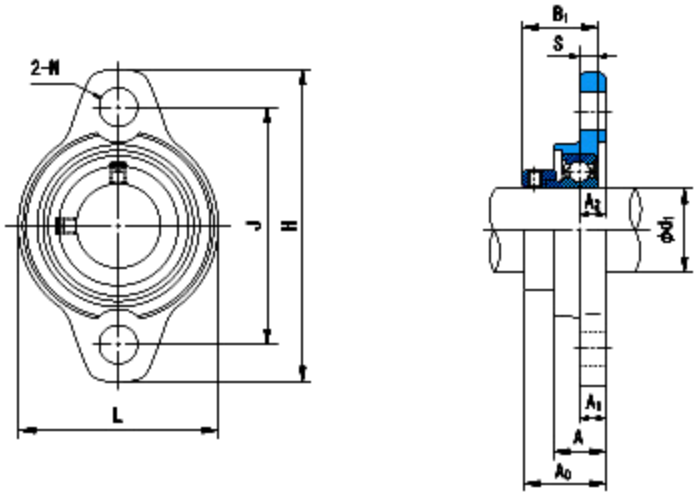

Dimensions

d1 = 25

A1 = 8

A2 = 8

A = 16

A0 = 27.5

B1 = 25.5

S = 6

Mass = 244 kg

Basic Dynamic Load Rating Cr : **10100** N

Basic Static Load Rating Cor : **5800** N

Limiting Speed ;

Grease Lubrication : **-** rpm

Oil Lubrication : **-** rpm

	INNER RING	OUTER RING
O.D.Surface Runout with Side :		-
Axial Runout with Bore :	-	
Axial Runout with Raceway :	-	-
Width Variation :	-	-
Radial Runout :	-	-