ROECO

Bearing Data

Ball Bearing Units

Bearing No. : UCC328

Dimensions

H = 360

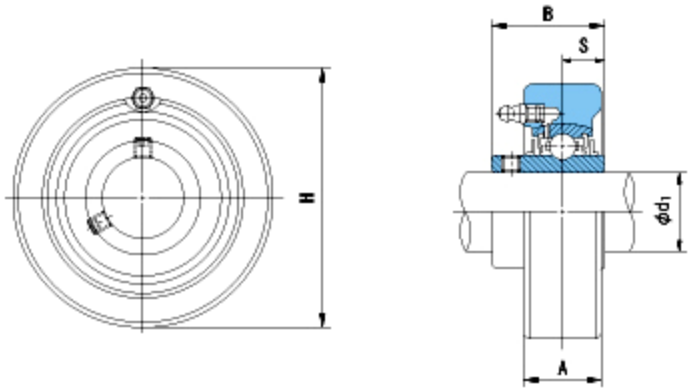

Dimensions

d1 = 140

A = 100

B = 145

S = 59

Mass = 48.9 kg

Basic Dynamic Load Rating Cr : **255000** N

Basic Static Load Rating Cor : **246000** N

Limiting Speed ;

Grease Lubrication : **-** rpm

Oil Lubrication : **-** rpm

	INNER RING	OUTER RING
O.D.Surface Runout with Side :		-
Axial Runout with Bore :	-	
Axial Runout with Raceway :	-	-
Width Variation :	-	-
Radial Runout :	-	-