ROECO

Bearing Data

Ball Bearing Units

Bearing No. : UCC311

Dimensions

H = 150

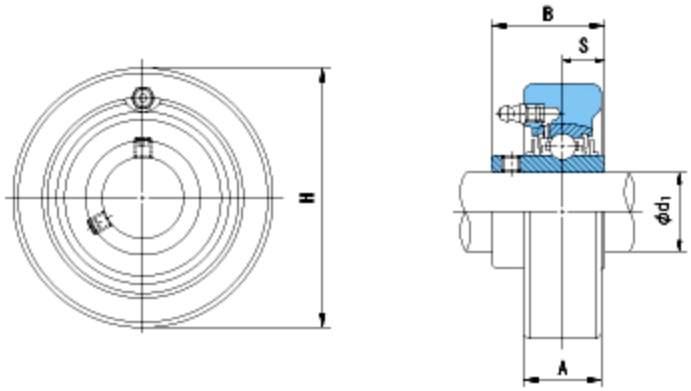

Dimensions

d1 = 55

A = 44

B = 66

S = 25

Mass = 3.9 kg

Basic Dynamic Load Rating Cr : **71500** N

Basic Static Load Rating Cor : **44800** N

Limiting Speed ;

Grease Lubrication : **-** rpm

Oil Lubrication : **-** rpm

	INNER RING	OUTER RING
O.D.Surface Runout with Side :		-
Axial Runout with Bore :	-	
Axial Runout with Raceway :	-	-
Width Variation :	-	-
Radial Runout :	-	-