

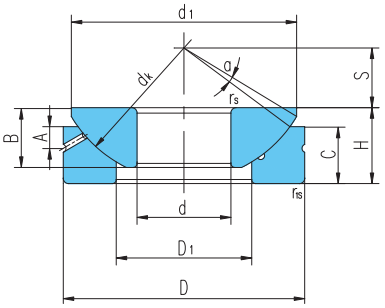

滑动摩擦副：钢 / 钢

Sliding contact surfaces：Steel / Steel

轴承型号 Bearing number	外形尺寸 Dimensions mm												额定载荷 Load ratings kN		重量 Weight ≈kg
	d	D	B	C	H	d_k	S	d_1 max	D_1 min	A	r_s,r_{1s} min	α° ≈	动载荷 Dynamic	静载荷 Static	
GX10S	10	30	7.5	7	9.5	32	7	27.5	15.5	3	0.6	5	27	136	0.036
GX12S	12	35	9.5	9.3	13	38	8	32	18	4	0.6	5	37	188	0.072
GX15S	15	42	11	10.8	15	46	10	39	22.5	5	0.6	6	53	267	0.108
GX17S	17	47	11.8	11.2	16	52	11	43.5	27	5	0.6	4	61	311	0.137
GX20S	20	55	14.5	13.8	20	60	12.5	50	31	6	1	5	84	425	0.246
GX25S	25	62	16.5	16.7	22.5	68	14	58.5	34.5	6	1	5	134	672	0.415
GX30S	30	75	19	19	26	82	17.5	70	42	8	1	5	182	909	0.614
GX35S	35	90	22	20.7	28	98	22	84	50.5	8	1	5	266	1330	0.973
GX40S	40	105	27	21.5	32	114	24.5	97	59	9	1	6	357	1810	1.59
GX45S	45	120	31	25.5	36.5	128	27.5	110	67	11	1	6	486	2470	2.24
GX50S	50	130	33	30.5	42.5	139	30	120	70	10	1	6	554	2810	3.14
GX60S	60	150	37	34	45	160	35	140	84	12.5	1	6	748	3820	4.63
GX70S	70	160	42	36.5	50	176	35	153	94.5	13.5	1	3	902	4610	5.37
GX80S	80	180	43.5	38	50	197	42.5	172	107.5	14.5	1	4	1110	5700	6.91
GX100S	100	210	51	46	59	222	45	198	127	15	1.1	4	1300	6470	11
GX120S	120	230	53.5	50	64	250	52.5	220	145	16.5	1.1	3	1530	7580	14
GX140S	140	260	61	54	72	274	52.5	243	177	23	1.5	3	1820	9040	19.1
GX160S	160	290	66	58	77	313	65	271	200	23	1.5	2	2100	10440	25
GX180S	180	320	74	62	86	340	67.5	299	225	26	1.5	4	2430	12070	32.8
GX200S	200	340	80	66	87	365	70	320	247	27	1.5	1	3070	15280	35.4